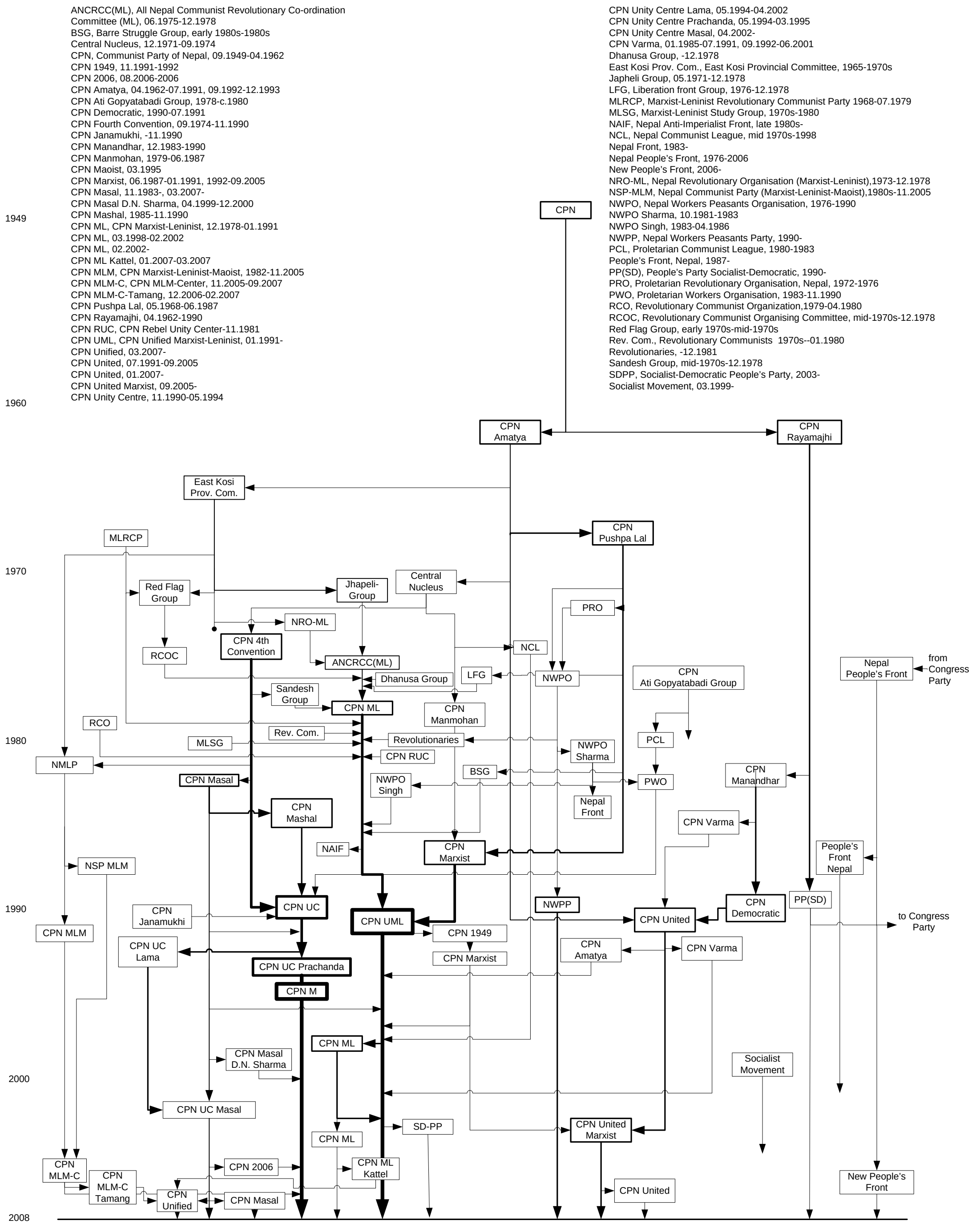The Communist Movement of Nepal (1949-2008)